Residential Deck Drawings

General Notes

1. All lumber shall be pressure treated for exterior use. All metal fasteners & hangers shall be G185 galvanized, stainless steel or otherwise compatible with the wood treatment. *All bolts shall be 1/2" diameter, minimum and staggered.*
2. All beams, joists, posts and decking shall be No. 2 Southern Pine, or better.
3. All beam splices and guard top rail splices shall occur at or on a post.
4. All footings shall be cast-in-place concrete with a min. 3000 psi compressive strength.
5. Guards are required at all areas where the deck/porch floor is greater than 30" above grade at any point.
6. Required guards shall be 36" tall (min.) and be constructed such that a 4" diameter object will not pass through.
7. Guard post spacing shall not exceed 6 ft. on center.
8. Required guards & handrails at stairs shall range from 34" to 38" vertically above the stair nosings.
9. Handrail ends, at the top and bottom, shall terminate into a post or be returned to a wall.
10. On stairs with closed risers, treads shall have a projected nosing ranging from 3/4" to 1-1/4". All treads and risers shall be equal.
11. The deck/porch floor shall be within 8-1/4" of the top of the door threshold.
12. Live Load Deflection: Joists & Beams- L/360
    Guards- L/240
13. Design Loads: Floor Live Load - 40 lbs./sf (min.)
    Wind Speed - 90 mph
    Soil Bearing Pressure - 2000 psf
14. Guards shall be designed for a 200 lb. concentrated load placed along the top rail in any direction, at any point.
15. This deck/porch is not designed for hot-tub or spa loading.
16. All exterior stairs & associated landings shall be illuminated.
17. Post size is based on the height of the deck floor above finished grade (at the highest point):
    0' to 8' high: 4x4, 4x6, 6x6
    over 8' to 10' high: 4x6, 6x6
    over 10' high: 6x6 (required for multi-level decks too)
18. All separated beams shall receive full depth solid blocking at 24" on center, maximum spacing.
19. *The actual field construction shall match the approved plans. All field changes and/or deviations require an Engineering Change approval or new permit.*

Framing/Footing Table

[1] Choose one floor joist size with the associated span, [2] Choose one floor beam size. Entire row applies.

Floor Joists[a]			Floor Beams[b]			Footing Size				1/2" Ledger Board Bolts
						Single-Span Floor Joists		Multi-Span Floor Joists		
Choose Joist Size	Lumber Size (nominal)	Max. Span [A] (feet)	Choose One Row	Lumber Size (nominal)	Max. Span [B] (feet)	min. dia. [C] (inches)	min. thick [D] (inches)	min. dia. [C] (inches)	min. thick [D] (inches)	Spacing (inches)
[ ]	2x6	8	[ ]	(2) 2x6	5	12	6	15	8	24
			[ ]	(2) 2x8	7	12	6	16	8	24
			[ ]	(2) 2x10	9	12	6	18	9	24
			[ ]	(2) 2x12	11	12	6	20	10	24
[ ]	2x8	10	[ ]	(2) 2x8	7	12	6	20	10	16
			[ ]	(2) 2x10	9	12	6	22	11	16
			[ ]	(2) 2x12	10	12	6	22	11	16
[ ]	2x10	13	[ ]	(2) 2x10	8	14	7	24	12	16
			[ ]	(2) 2x12	9	14	7	26	13	16
[ ]	2x12	16	[ ]	(2) 2x12	8	16	8	28	14	12

a. Choose one joist size and cooresponding maximum span. All joists are spaced a maximum of 16" oc.
b. Choose one floor beam (entire row) that cooresponds with the size of joist chosen.

Beam to Post Connection Options

[3] Choose one beam to post connection option. [4] Choose one post size based on the height of the deck.

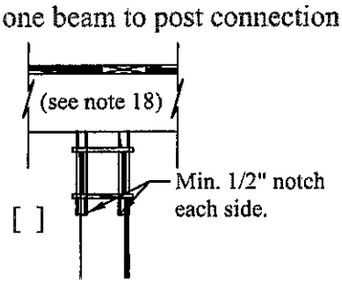

[ ] 4x4 posts (up to 8 ')
[ ] 4x6 posts (up to 10')
[ ] 6x6 posts req'd over 10')

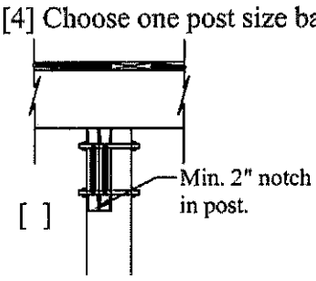

[ ]6x6 posts (only)

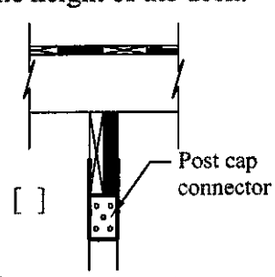

[ ] 4x4 posts (up to 8 ')
[ ] 4x6 posts (up to 10')
[ ] 6x6 posts req'd over 10')

Property Owner:	Person Completing this Form:	Contractor:	Application No.
Name:	Name:	Name:	
Address:	Address:	Address:	Sheet No.
Phone:	Phone:	Phone:	1 of 5
			Residential Deck Drawings

Foundation & Framing Plan

[5] Choose one span configuration:

[ ] Single-Span
[ ] Multi-Span

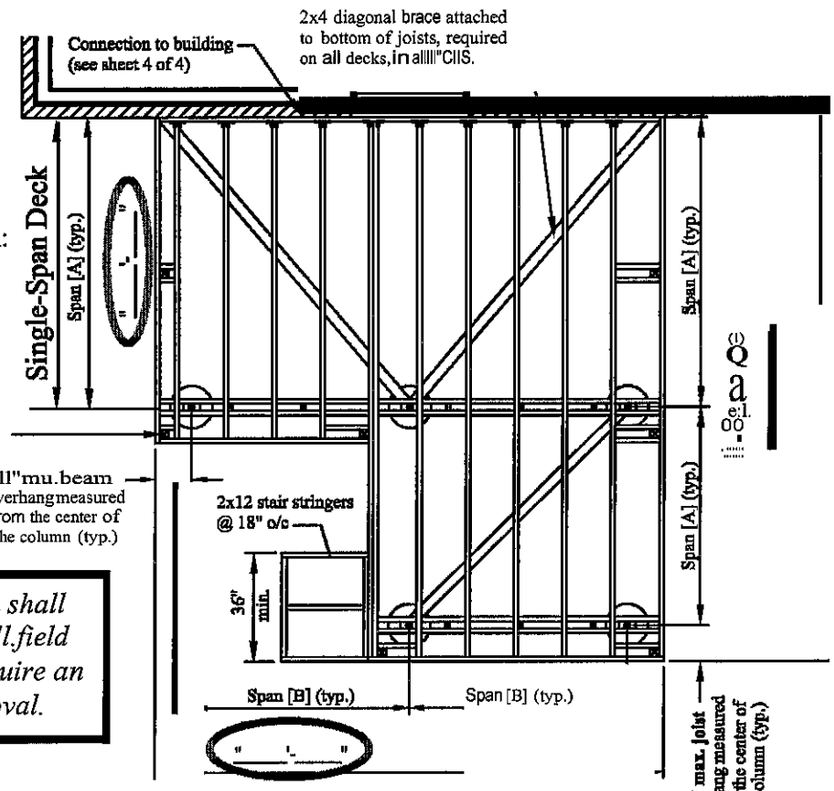

The actual field construction shall match the approved plans. All field changes and/or deviations require an Engineering Change approval.

[7] Fill in this over-all deck dimension.

Deck Finished Floor Plan

[8] Fill in the stair width, in inches (36" min.).

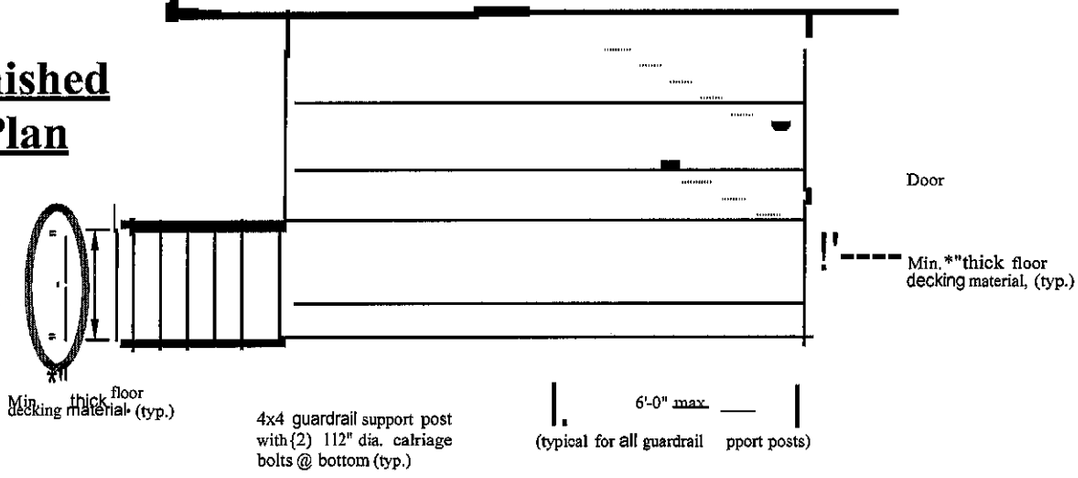

Front Elevation View

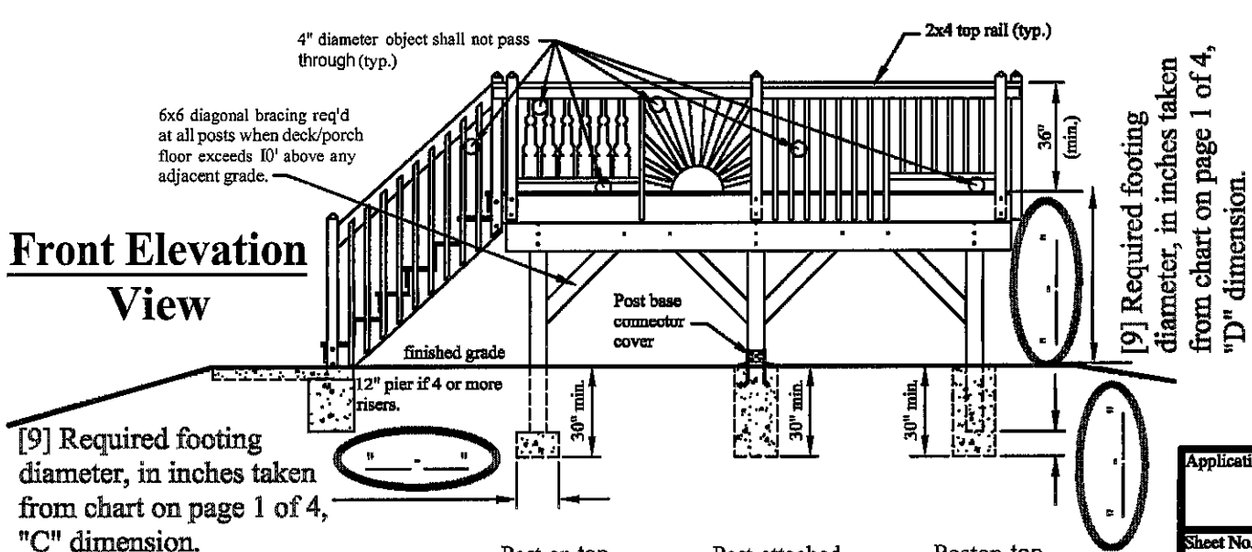

[9] Required footing diameter, in inches taken from chart on page 1 of 4, "D" dimension.

[9] Required footing diameter, in inches taken from chart on page 1 of 4, "C" dimension.

[10] Choose a footing option:

Post on top
[ ] ofburied concrete footing

Post attached
[ ] totopof concrete footing

Poston top
[ ] ofburied concrete footing

Application No.

Sheet No.

2 of5

Left Side Elevation View

The actual field construction shall match the approved plans. All field changes and/or deviations require an Engineering Change approval.

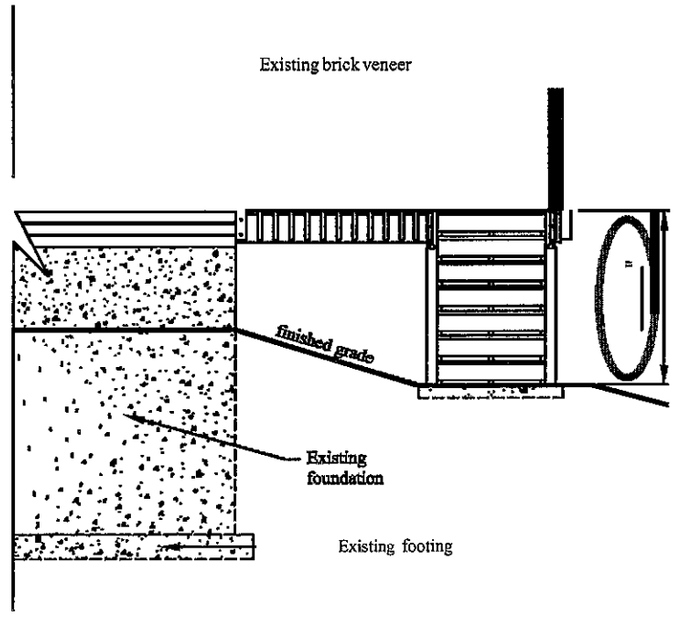

[11] Fill in the highest point above grade in inches.

Stair Section View

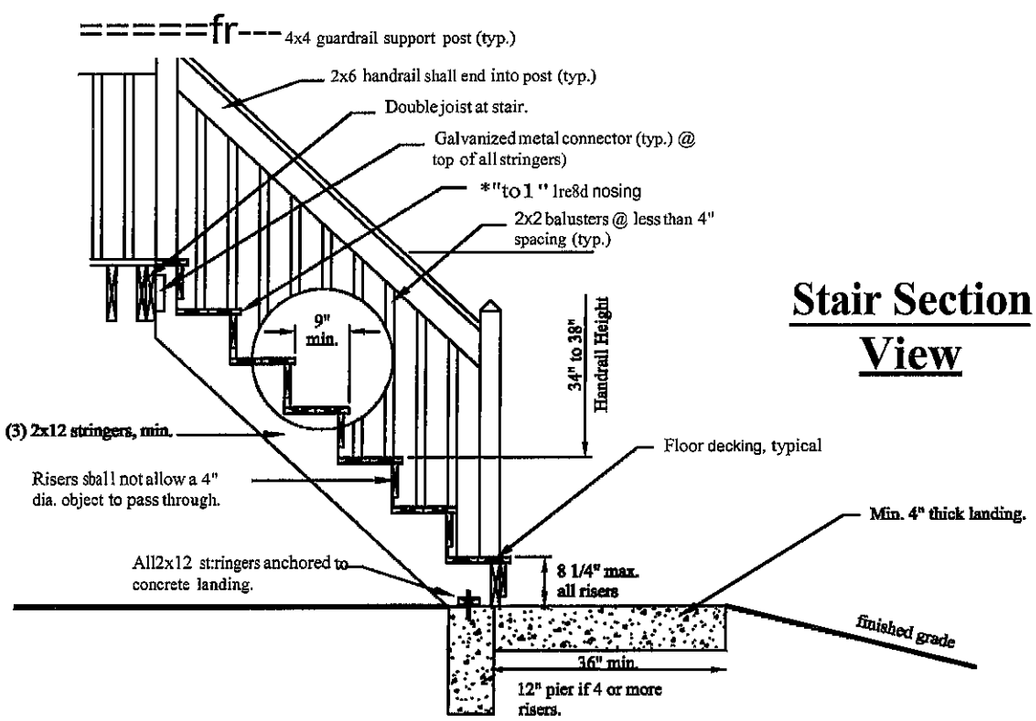

Handrail Sections

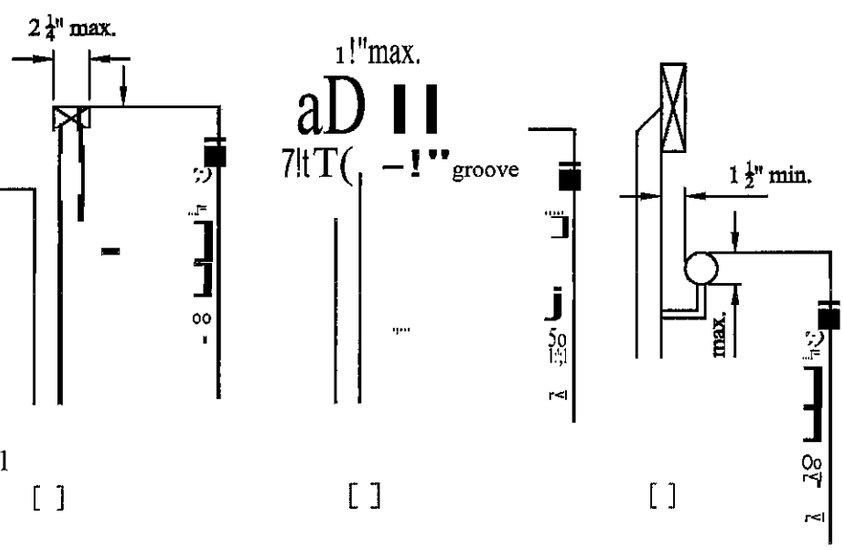

[12] Choose a handrail grip style: [ ] [ ] [ ]

Application No.

Sheet No.

C:\A City of Cincinnati\Sample Drawings\

Post&Beam Detail

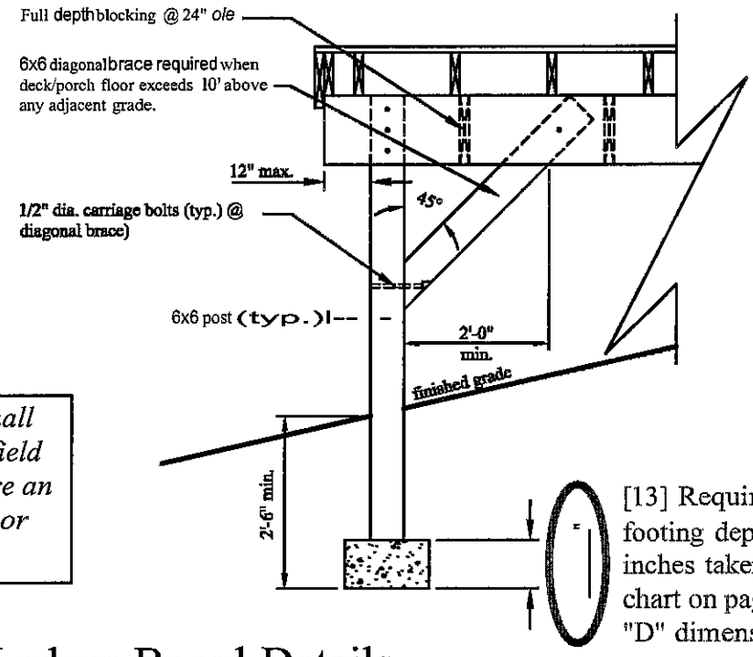

The actual field construction shall match the approved plans. All field changes and/or deviations require an Engineering Change approval or new permit.

[13] Required footing depth, in inches taken from chart on page 1 of 4 "D" dimension.

Ledger Board Details

[14] Choose the ledger board detail that applies.

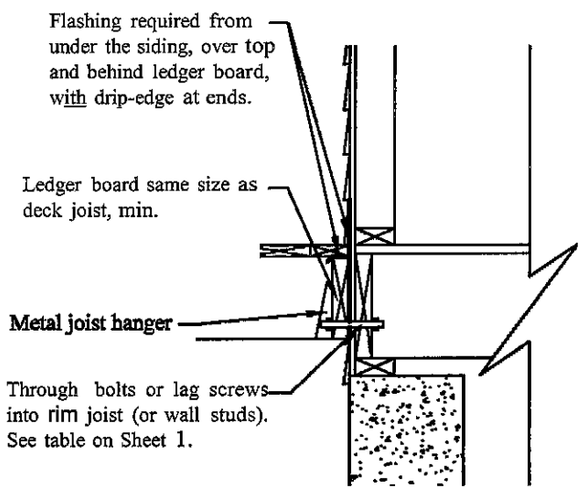

[ ] Siding Applications

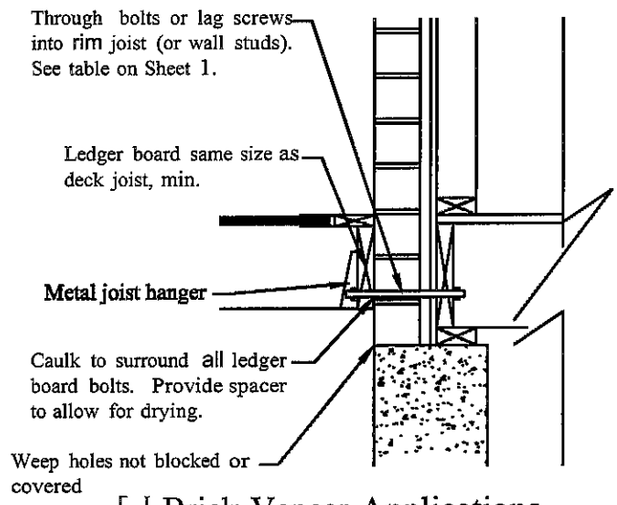

[J Brick Veneer Applications

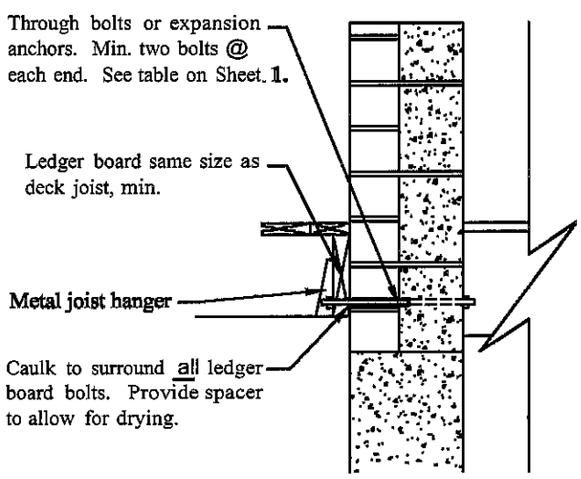

[J Brick/Block Applications

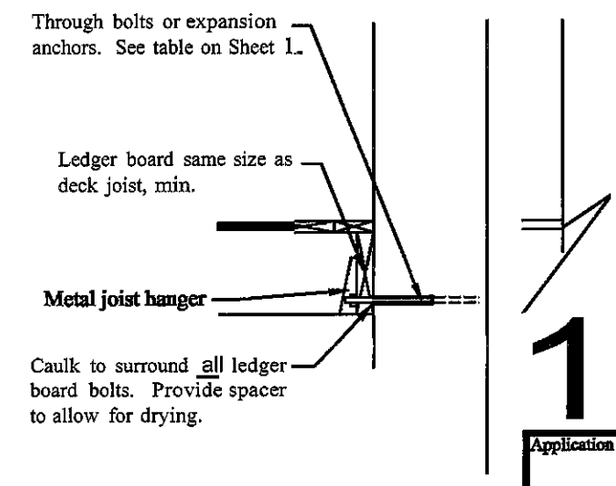

[J Concrete Applications

THE 1/2" BOLTS MUST BE STAGGERED

1

Application No.

Sheet No.

4 of5

Residential Deck Drawings

C:\A City of Cincinnati\S

SITE PLAN

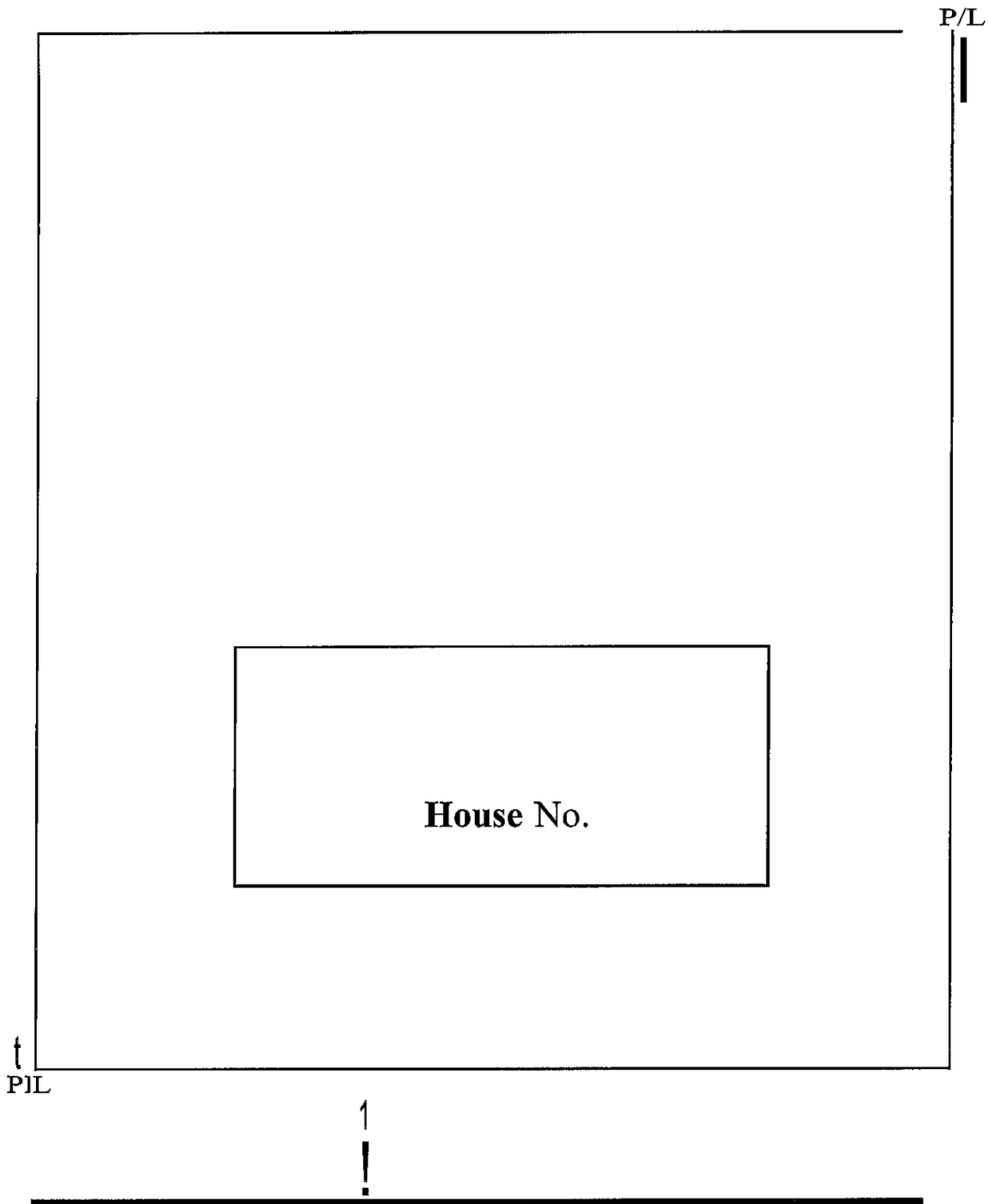

fApplication No.

heetNo.

5 of5

Residential Fence Location
Standard Lot

Note: Fences shall NOT Be Located in Front yard. and shall NOT Be Greater than 6 FT. in Height.

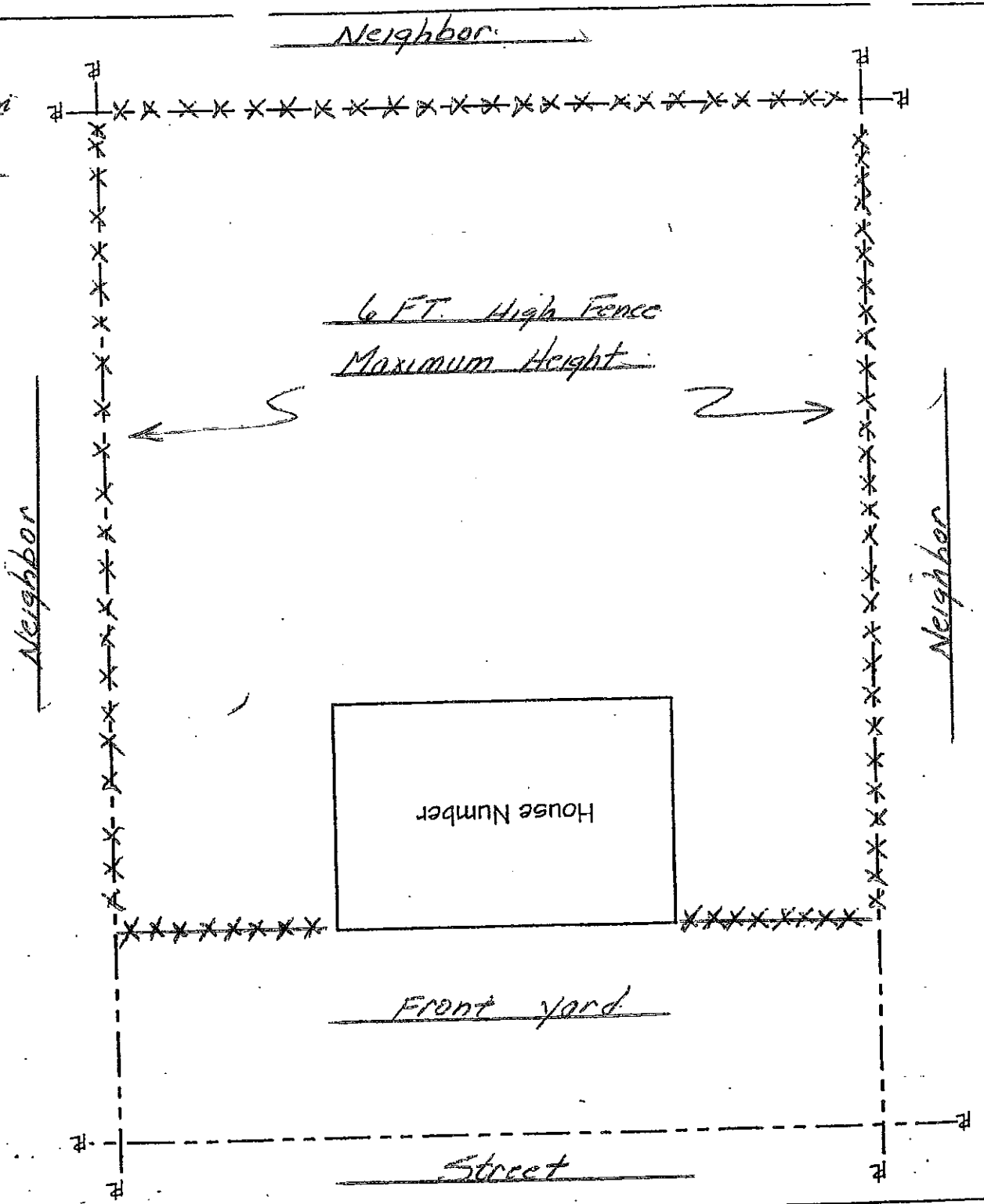

Residential Fence Location

Through Lot

Note: Fences shall NOT Be Located in Front yard and shall NOT Be Greater than 6 FT. in Height

Through Lots Have 2 Front yards

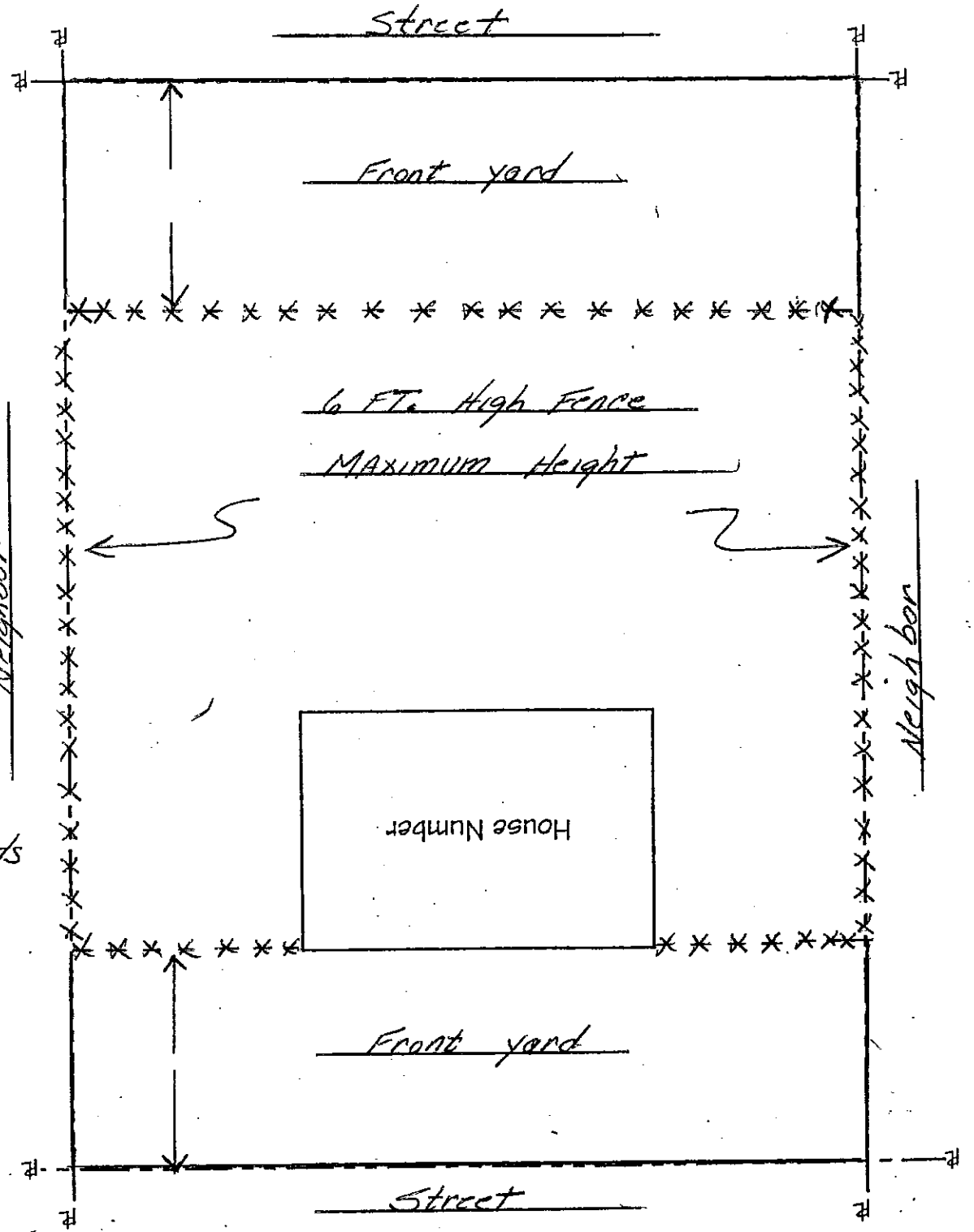

Residential Fence Location
Corner Lot

Note: Fences shall NOT Be Located in Front yard and shall NOT Be Greater than 6 FT. in Height.
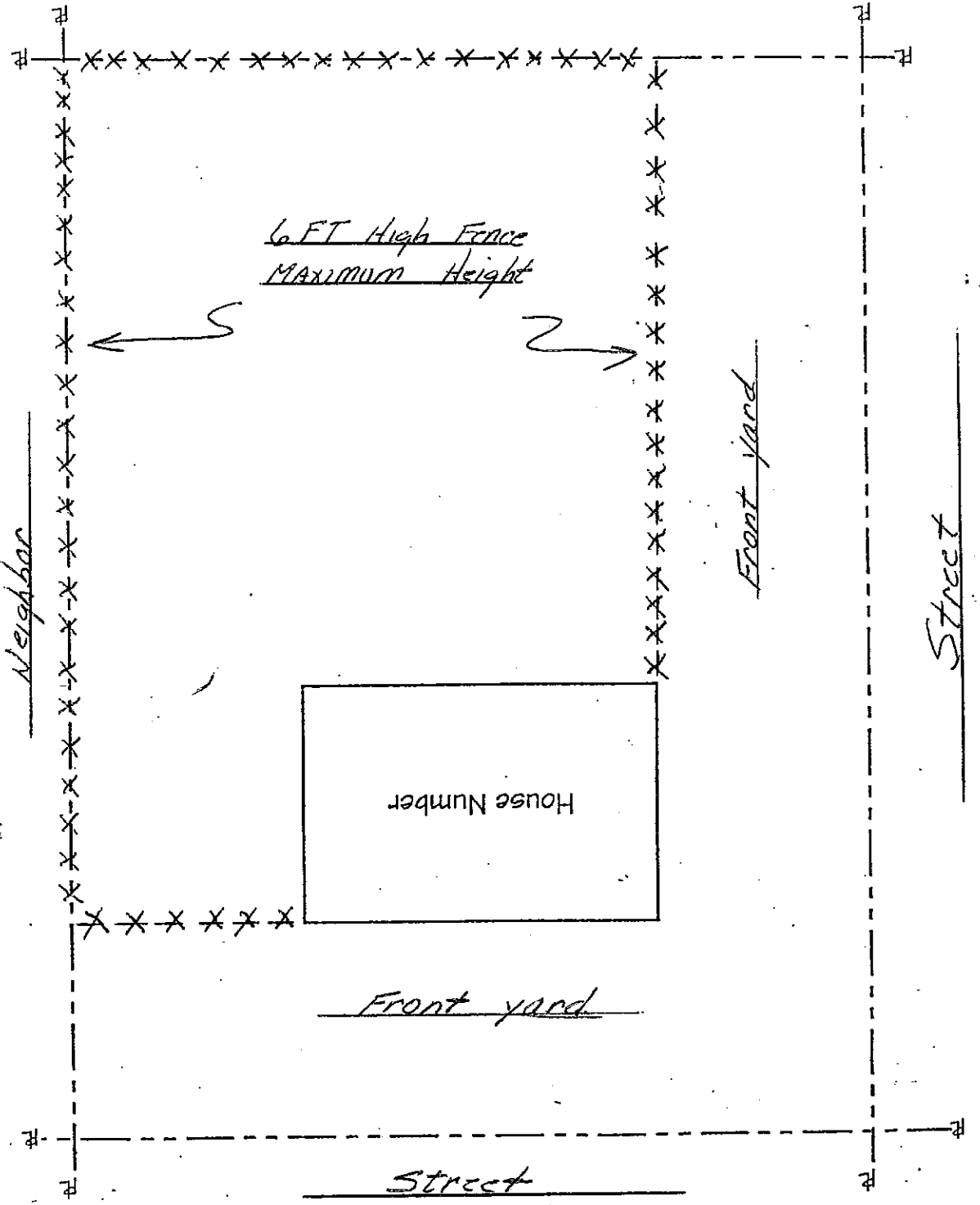
Corner Lots Have 2 Front yards